Absolute encoders - modular bus covers

Blind hollow shaft up to ø15 mm

Magnetic single- or multiturn encoders 12 bit ST / 18 bit MT

BMSH 58, BMMH 58 flexible - *MAGRES*

BMMH 58 flexible with blind hollow shaft

Features

- **Encoder single- or multiturn / bus cover**
- **Robust magnetic sensing**
- **Resolution: singleturn 12 bit, multiturn 18 bit**
- **Modular fieldbus interfaces**
- **CANopen®/DeviceNet/EtherCAT/EtherNet-IP SAEJ1939/PROFINET/POWERLINK/Profibus**
- **Resolution and zero point programmable**
- **High resistance to shock and vibrations**
- **Operating temperature -40...+85 °C**
- **Blind hollow shaft up to ø15 mm**

Technical data - electrical ratings

Voltage supply	10...30 VDC
Consumption w/o load	≤200 mA (24 VDC)
Initializing time	≤250 ms after power on
Interfaces	CANopen®, DeviceNet, EtherCAT, EtherNet/IP, Profibus-DPV0/V2, PROFINET, POWERLINK, SAEJ1939
Device adress	Rotary switch in bus cover (type-specific, see data sheet bus cover)
Steps per turn	≤4096 / 12 bit
Sensing method	Magnetic
Angular accuracy	±0.5 °
Repeatability	0.3 °
Code	Binary
Code sequence	CW default, programmable
Interference immunity	DIN EN 61000-6-2
Emitted interference	DIN EN 61000-6-3
Programmable parameters	Steps per revolution Number of revolutions Preset Scaling Rotating direction
Diagnostic functions	Multiturn sensing Position error
Status indicator	DUO-LED integrated in bus cover
Approval	UL approval / E217823
BMSH 58	
Function	Singleturn
BMMH 58	
Function	Multiturn
Number of turns	≤262144 / 18 bit

Technical data - mechanical design

Size (flange)	ø58 mm
Shaft type	ø12 mm (blind hollow shaft) ø15 mm (blind hollow shaft)
Protection DIN EN 60529	IP 65 (without shaft seal), IP 67 (with shaft seal)
Operating speed	≤6000 rpm
Starting torque	≤2 Ncm (+20 °C, IP 65) ≤2.5 Ncm (+20 °C, IP 67)
Materials	Housing: steel zinc-coated Flange: aluminium Bus cover: zinc die-cast Hollow shaft: stainless steel
Operating temperature	-40...+85 °C (see general informations)
Relative humidity	95 %
Resistance	DIN EN 60068-2-6 Vibration 30 g, 10-2000 Hz DIN EN 60068-2-27 Shock 200 g, 6 ms
Weight approx.	480 g
Connection	Bus cover

Subject to modification in technic and design. Errors and omissions excepted.

Part number

Singleturn

BMSH 58S1N [ ] [12/00] [ ] [ ] [ ]

Connection
- D Encoder with bus cover / cable gland (CANopen, DeviceNet, Profibus)
- E Encoder with bus cover, M12

Blind hollow shaft
- 2 ø12 mm
- B ø15 mm

Protection
- P IP 65
- Q IP 67

Resolution
- 12/00 12 bit singleturn

Voltage supply / signals
- 24B 10...30 VDC / CANopen®
- 24D 10...30 VDC / DeviceNet
- 24P 10...30 VDC / Profibus-DPV0
- 24Q 10...30 VDC / Profibus-DPV2
- 246 10...30 VDC / EtherCAT
- 24I 10...30 VDC / EtherNet/IP
- 24L 10...30 VDC / POWERLINK
- 24H 10...30 VDC / PROFINET
- 24J 10...30 VDC / SAEJ1939

CD with file descriptions is not included in the delivery.
You may order them on CD as accessory under part number 10147362.

Multiturn

BMMH 58S1N [ ] [ ] [ ] [ ] [ ]

Connection
- D Encoder with bus cover / cable gland (CANopen, DeviceNet, Profibus)
- E Encoder with bus cover, M12

Blind hollow shaft
- 2 ø12 mm
- B ø15 mm

Protection
- P IP 65
- Q IP 67

Resolution
- 12/18 12/18 bit single-/multiturn (only CANopen)
- 12/16 12/16 bit single-/multiturn

Voltage supply / signals
- 24B 10...30 VDC / CANopen®
- 24D 10...30 VDC / DeviceNet
- 24P 10...30 VDC / Profibus-DPV0
- 24Q 10...30 VDC / Profibus-DPV2
- 246 10...30 VDC / EtherCAT
- 24I 10...30 VDC / EtherNet/IP
- 24L 10...30 VDC / POWERLINK
- 24H 10...30 VDC / PROFINET
- 24J 10...30 VDC / SAEJ1939

Subject to modification in technic and design. Errors and omissions excepted.

Absolute encoders - modular bus covers

Blind hollow shaft up to ø15 mm

Magnetic single- or multiturn encoders 12 bit ST / 18 bit MT

BMSH 58, BMMH 58 flexible - *MAGRES*

General informations

Self-heating interrelated to speed, protection, attachment method and ambient conditions as well electronics and supply voltage must be considered for precise thermal dimensioning. Self-heating is supposed to approximates 6 K (IP 65 protection) respectively 12 K (IP 67 protection) per 1000 rpm. Operating the encoder close to the maximum limits requires measuring the real prevailing temperature at the encoder flange.

Accessories

Mounting accessories	
11136718	Set of spring washers for encoders ø58 mm
10110616	Clamp set ø15 mm
10107540	Torque pin
10109520	Torque spring
Programming accessories	
10147362	CD-ROM with GSD-/EDS-/XML files and user manuals

Subject to modification in technic and design. Errors and omissions excepted.

Dimensions

BMSH/BMMH 58 flexible, IP 65

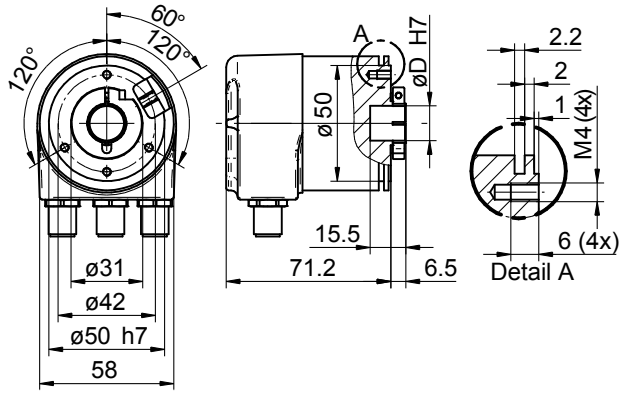

BMSH/BMMH 58 flexible, IP 67

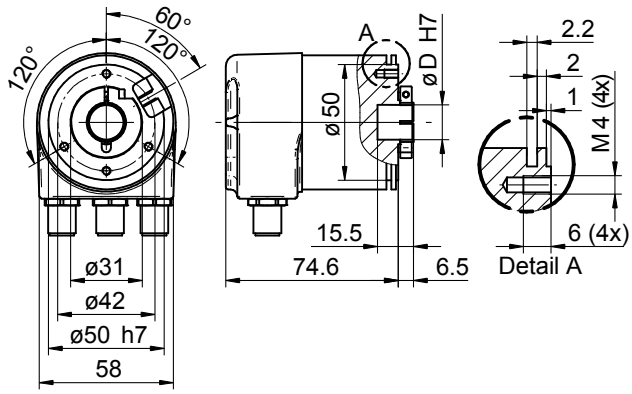

Torque pin support

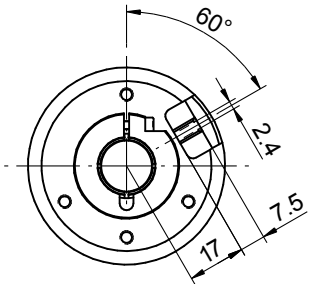

Bore torque pin

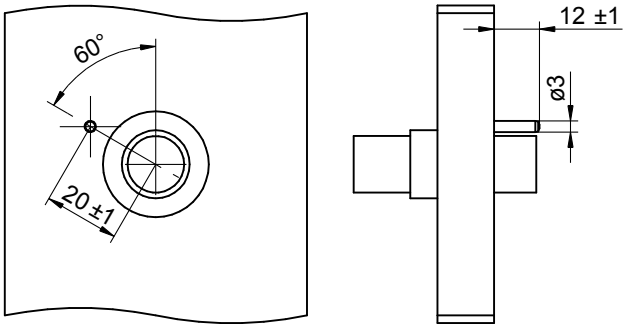

Set of spring washers

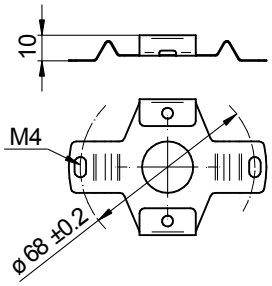

Hollow shaft mounting

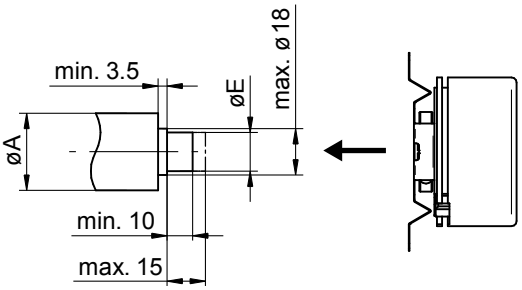

Subject to modification in technic and design. Errors and omissions excepted.

Absolute encoders - modular bus covers

Blind hollow shaft up to ø15 mm

Magnetic single- or multiturn encoders 12 bit ST / 18 bit MT

BMSH 58, BMMH 58 flexible - *MAGRES*

Dimensions

Profibus-DP/CANopen®

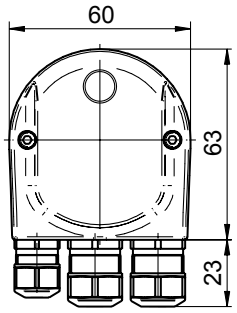

Profibus-DP - M12

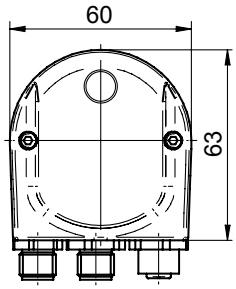

DeviceNet

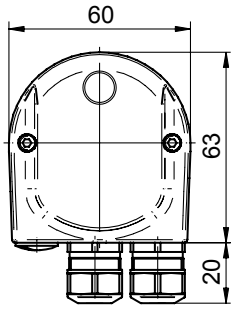

CANopen®/DeviceNet M12

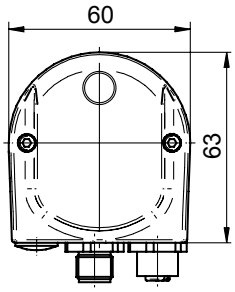

EtherCAT/EtherNet-IP

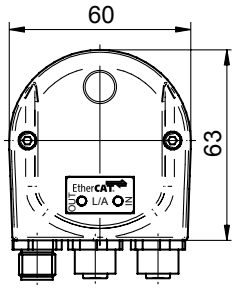

PROFINET/POWERLINK

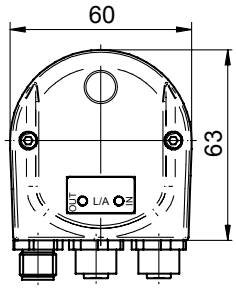

SAEJ1939 - M12

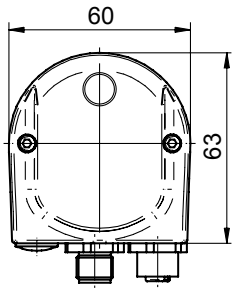

Subject to modification in technic and design. Errors and omissions excepted.
18/5/2016